Autonomous Portable Water Quality Checker

BY

W.T. SANGEETH

202152

Supervised by

Eng. S.R.L. Gunawardhana

Contents

- Introduction
- Problem Identification
- Research Objectives
- Methodology
- Results
- Conclusion
- Future Enhancements
- References

Introduction

- Water quality monitoring is essential for environmental protection and public health.
- Traditional methods rely on **manual sampling** and **lab analysis -** costly, slow, and unsafe
- Limited real-time data - contamination may go undetected.
- We need a faster, cheaper, and smarter way to monitor our rivers, lakes, and reservoirs.

Problem Identification

- **Time Delays:** Lab results take days or weeks.
- **High operational cost:** Requires skilled labour and transport.
- **Safety risks:** Manual sampling in deep or contaminated water.
- **No depth profiling:** Surface-only data ignores vertical variation.
- Lack of real-time visibility and reporting.

Research Objectives

- **Primary Objective:**

  - To design and develop a **fully autonomous robotic system** for real-time water quality monitoring with depth profiling.

- **Specific Objectives:**

  - Build a stable **catamaran-based unmanned surface vehicle (USV)**.
  - Design a **depth-adjustable sensor system** (up to 1.5 m).
  - Integrate **IoT-based data pipeline** using MQTT, InfluxDB, and React.js.
  - Provide **real-time dashboard** and **automated reports**.

Methodology

Overall System Architecture

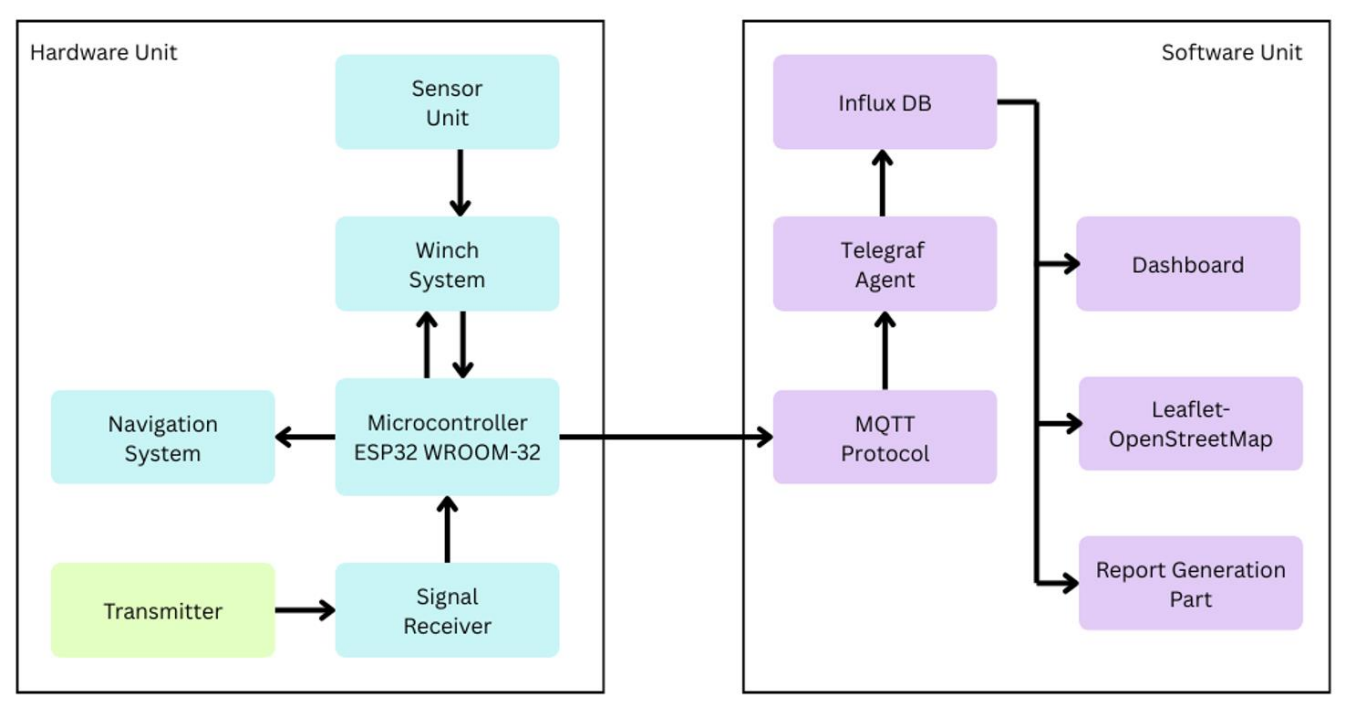

Methodology Cont.

The Robotic Boat Platform

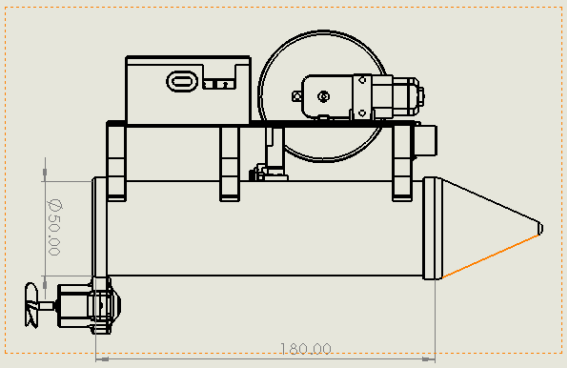

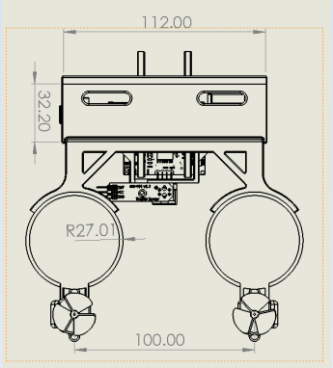

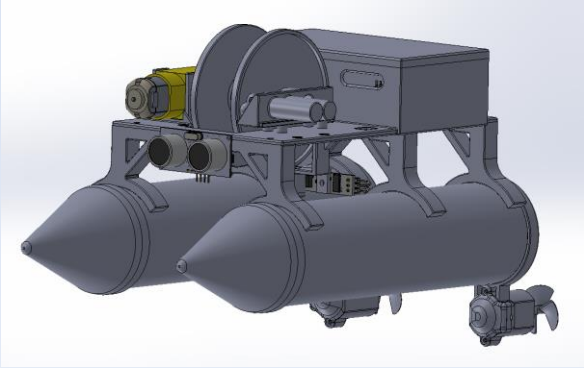

- Stable catamaran design (twin hulls).
- Made from lightweight PVC and 3D-printed parts.
- Powered by two motors for movement and steering.
- SolidWorks used for design structure

Methodology Cont.

Depth Profiling Mechanism

- A motorized winch lowers and raises the sensor probe.
- A slip-ring allows continuous power and data while the probe moves.
- Controlled via ESP32 firmware.
- This reveals how water quality changes with depth.

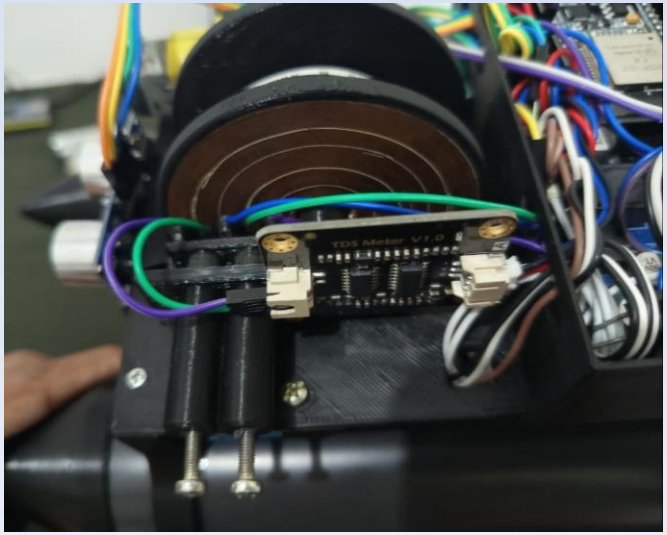

Methodology Cont.

Sensors & Measurements

- **TDS Sensor:** Measures Total Dissolved Solids to assess water purity.
- **DS18B20 Sensor:** A waterproof sensor for accurate water temperature.
- **DHT11 Sensor:** Measures ambient air temperature and humidity.
- **Core Parameters:** These three sensors provide the primary data.
- **Calculated Parameters:** Software derives 15+ values like Water Quality Index and hardness.

Methodology Cont.

Electronics Development

- Initial prototype was built on a breadboard for testing and debugging.
- Verified sensor readings, motor control, and MQTT data transmission.
- Final PCB was designed in Altium Designer for compactness and reliability.
- Fabricated professionally on 1.6mm FR4 substrate using Gerber files.

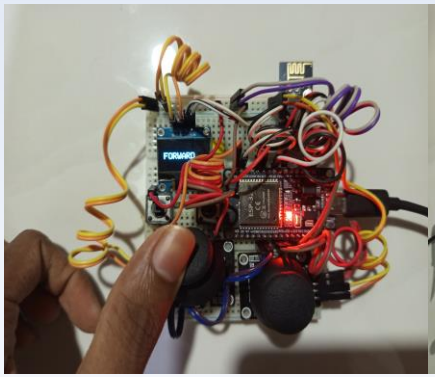

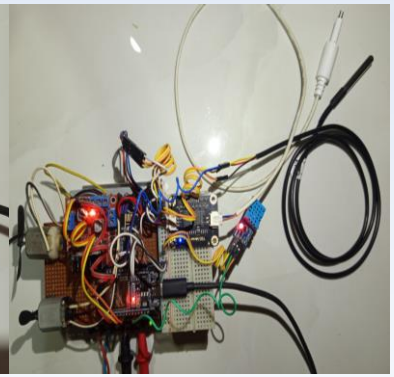

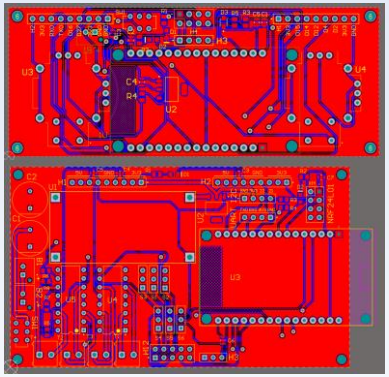

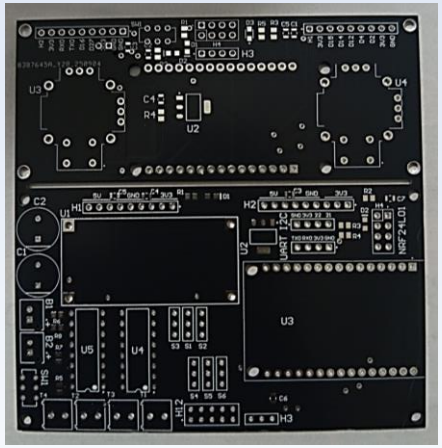

Methodology Cont.

Software Architecture

- ESP32 RTOS Firmware: Handles multitasking for sensors, motors, and communication.
- MQTT Protocol: Lightweight and reliable data transmission from the boat.
- InfluxDB: A specialized time-series database for efficient data storage.
- React.js & Grafana: Powerful tools for building the real-time visualization dashboard.

Methodology Cont.

Dashboard & Visualization

- A central hub for live sensor data, system status.
- Grafana panels display trends for Temperature, TDS, and Water Quality Index.
- User-friendly interface designed for quick insights and decision-making.
- Accessible from any device with a web browser.

Methodology Cont.

Live Tracking & Automated Reporting

- **Integrated Leaflet.js Map**: Tracks the boat's live GPS position in real-time.
- **Clickable Map Markers:** Show sensor values directly on the map for spatial analysis.
- **Automated Report Generation:** Exports data as PDF and CSV files.
- **Enables easy data sharing**, archiving, and in-depth analysis.

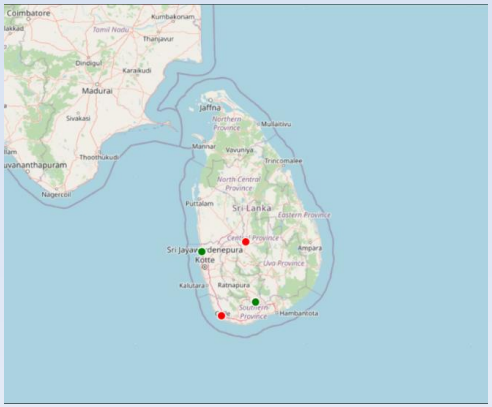

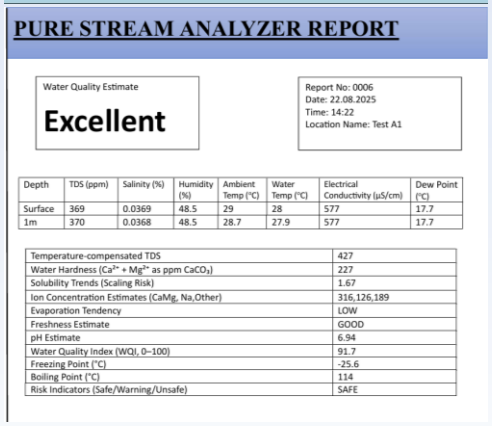

PURE STREAM ANALYZER REPORT

Water Quality Estimate

Excellent

Report No: 0006
Date: 22.08.2025
Time: 14:22
Location Name: Test A1

Depth	TDS (ppm)	Salinity (%)	Humidity (%)	Ambient Temp (°C)	Water Temp (°C)	Electrical Conductivity (µS/cm)	Dew Point (°C)
Surface	369	0.0369	48.5	29	28	577	17.7
1m	370	0.0368	48.5	28.7	27.9	577	17.7

Temperature-compensated TDS	427
Water Hardness (Ca^{2+} + Mg^{2+} as ppm $CaCO_3$)	227
Solubility Trends (Scaling Risk)	1.67
Ion Concentration Estimates (CaMg, Na,Other)	316,126,189
Evaporation Tendency	LOW
Freshness Estimate	GOOD
pH Estimate	6.94
Water Quality Index (WQI, 0–100)	91.7
Freezing Point (°C)	-25.6
Boiling Point (°C)	114
Risk Indicators (Safe/Warning/Unsafe)	SAFE

Results

Test Scenario	Outcome	Validation
Manual Control	All motors responded correctly to joystick inputs.	Successful remote control.
Obstacle Avoidance	Unit consistently detected obstacles and executed avoidance manoeuvres.	Robust autonomous navigation achieved.
Depth Profiling	Sensor probe lowered to 1.5 m and retrieved smoothly without signal loss.	Depth-adjustable mechanism functional.
Data Acquisition	Stable readings for TDS, Temp, Salinity obtained at multiple depths	Successful multi-parameter, multi-depth data collection.
Data Transmission	Data packets appeared on dashboards with ~8s latency. Location tracked.	End-to-end IoT data pipeline operational.
Report Generation	Comprehensive reports generated for selected timeframes	Automated reporting module functional.
Offline Data Logging	Successfully saved data to SD card during Wi-Fi disconnection	Resilient data storage

Results Cont.

Field Performance Results

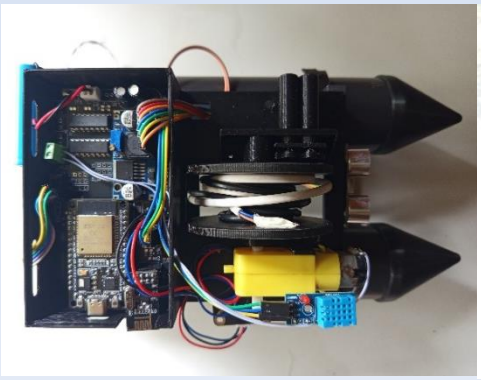

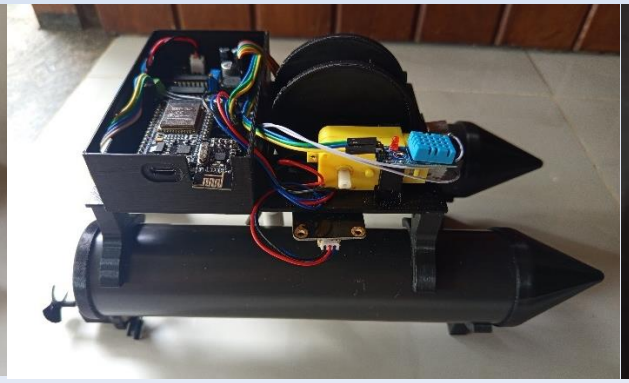

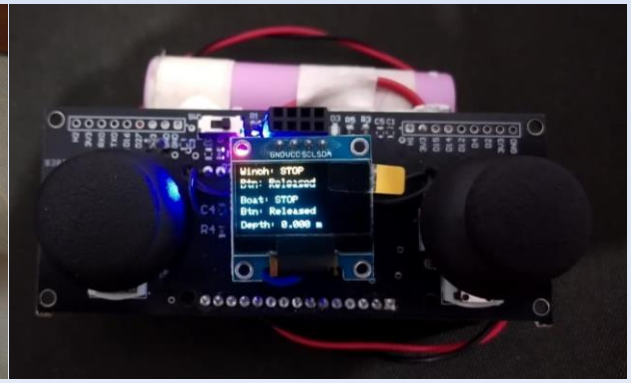

- 1 hours 30 minutes continuous operation.
- 900m communication range.
- 99% data completeness.
- 1.3 °C temperature drop with depth.
- 5.2% TDS increase with depth.

Conclusion

- Successfully developed a low-cost, autonomous water quality monitoring system.
- The innovative depth-profiling feature provides unique insights.
- This technology make advanced water monitoring accessible and affordable

Future Enhancements

- Add solar power for continuous operation.
- Implement LoRaWAN for long-range data link.
- Add more sensors (e.g., pH, Dissolved Oxygen)..
- Develop multi-boat collaborative monitoring network.

References

[1] APHA, "Standard Methods for the Examination of Water and Wastewater," 23rd ed., Washington, DC: American Public Health Association, 2017.

[2] ISO 7888, "Water quality - Determination of electrical conductivity," International Organization for Standardization, 2018.

[3] R. M. Brown et al., "A water quality index: Do we dare?" *Water and Sewage Works*, vol. 117, no. 10, pp. 339-343, 1970.

[4] Maxim Integrated, "DS18B20 Programmable Resolution 1-Wire Digital Thermometer," Datasheet, 2019.

[5] Aosong Electronics, "DHT11 Humidity & Temperature Sensor," Datasheet, Version 4.6, Nov. 2023.

[6] G. E. Hutchinson, "A treatise on limnology: Geography, physics, and chemistry," vol. 1, New York: Wiley, 1957.

[7] Dassault Systèmes, "SOLIDWORKS 2024 What's New - Design and Documentation," Dassault Systèmes SolidWorks Corp., Waltham, MA, USA, 2024.

Thank You